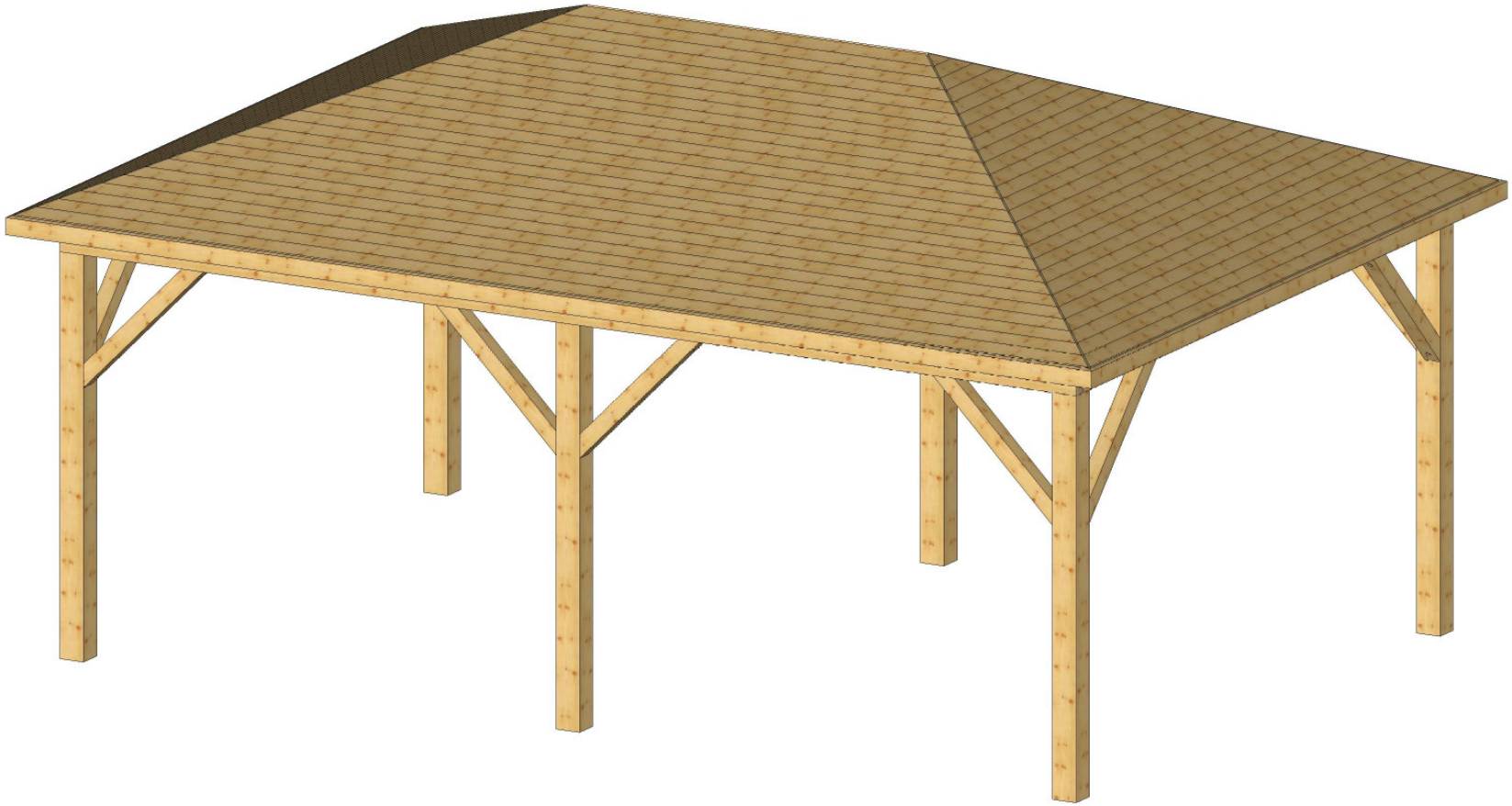

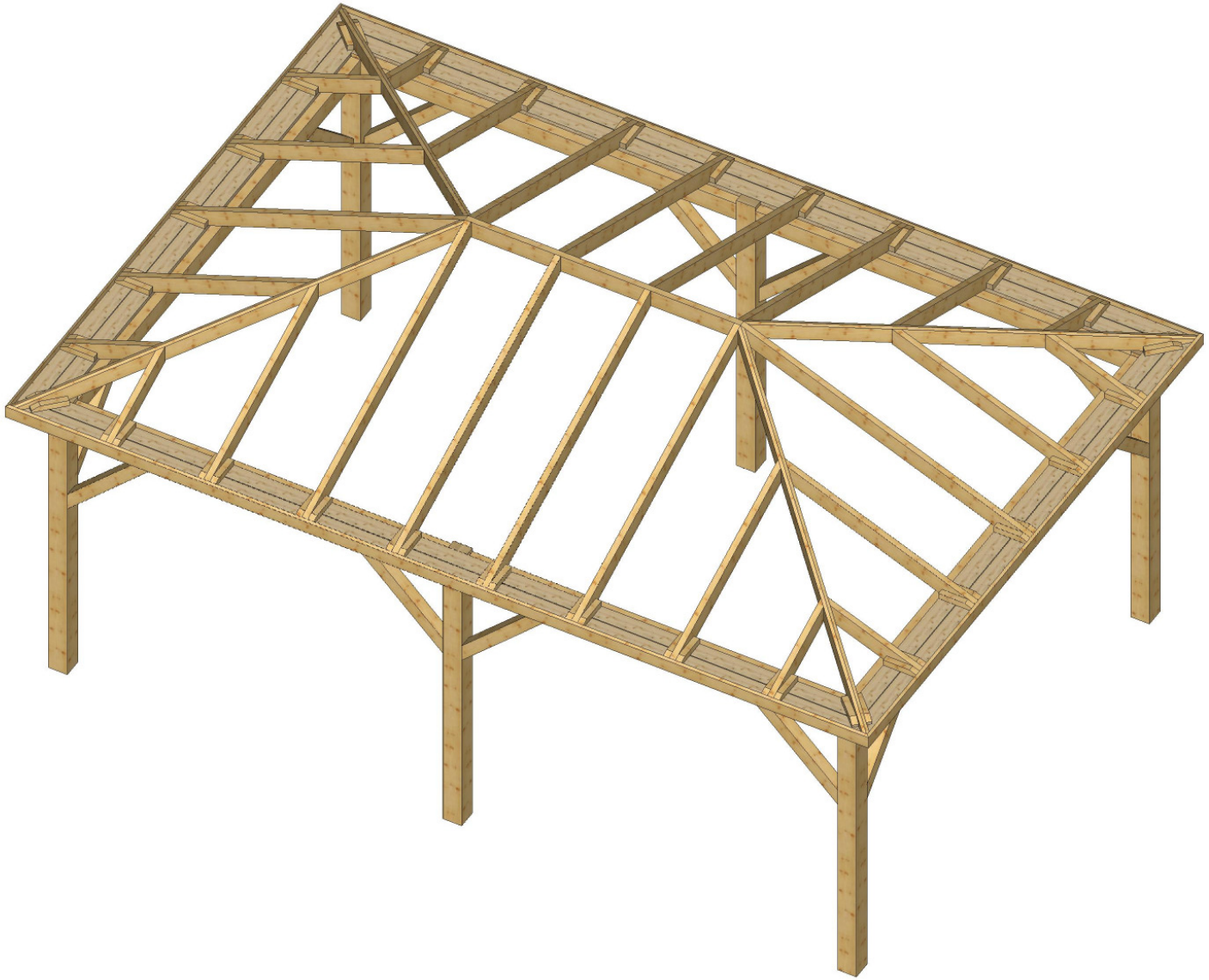

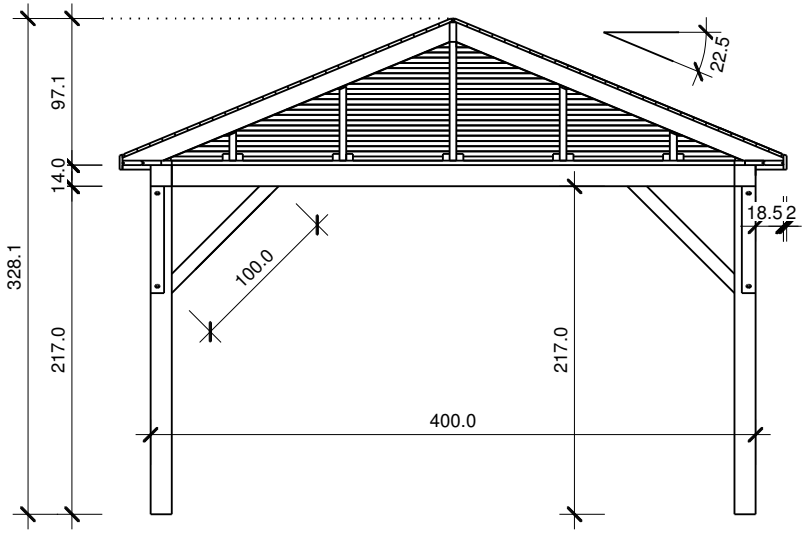
97.1
14.0
328.1
217.0
100.0
217.0
400.0
22.5
18.5
2

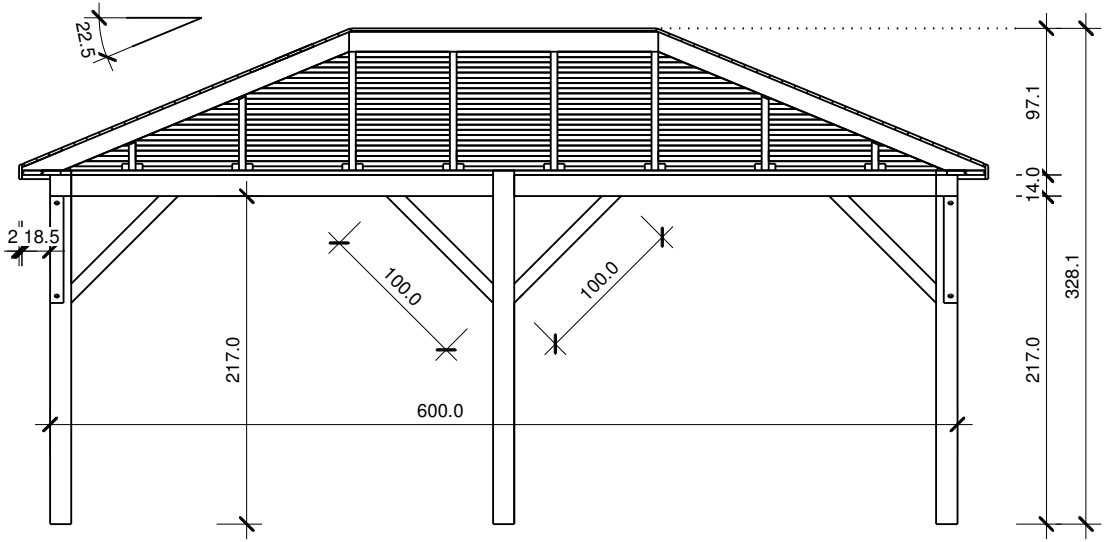
22.5
2
18.5
100.0
100.0
217.0
600.0
97.1
14.0
328.1
217.0

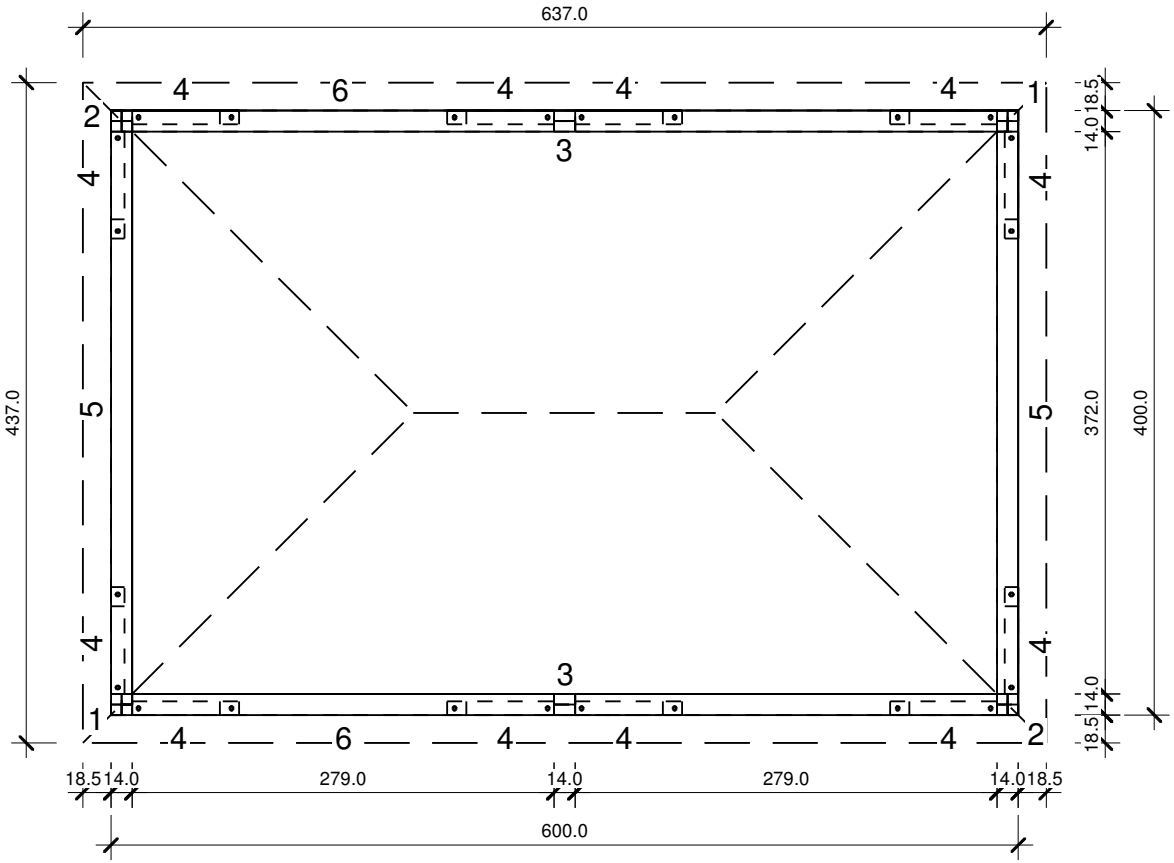
637.0
437.0
372.0
400.0
600.0
279.0
279.0
14.0
18.5
1
2
3
4
5
6

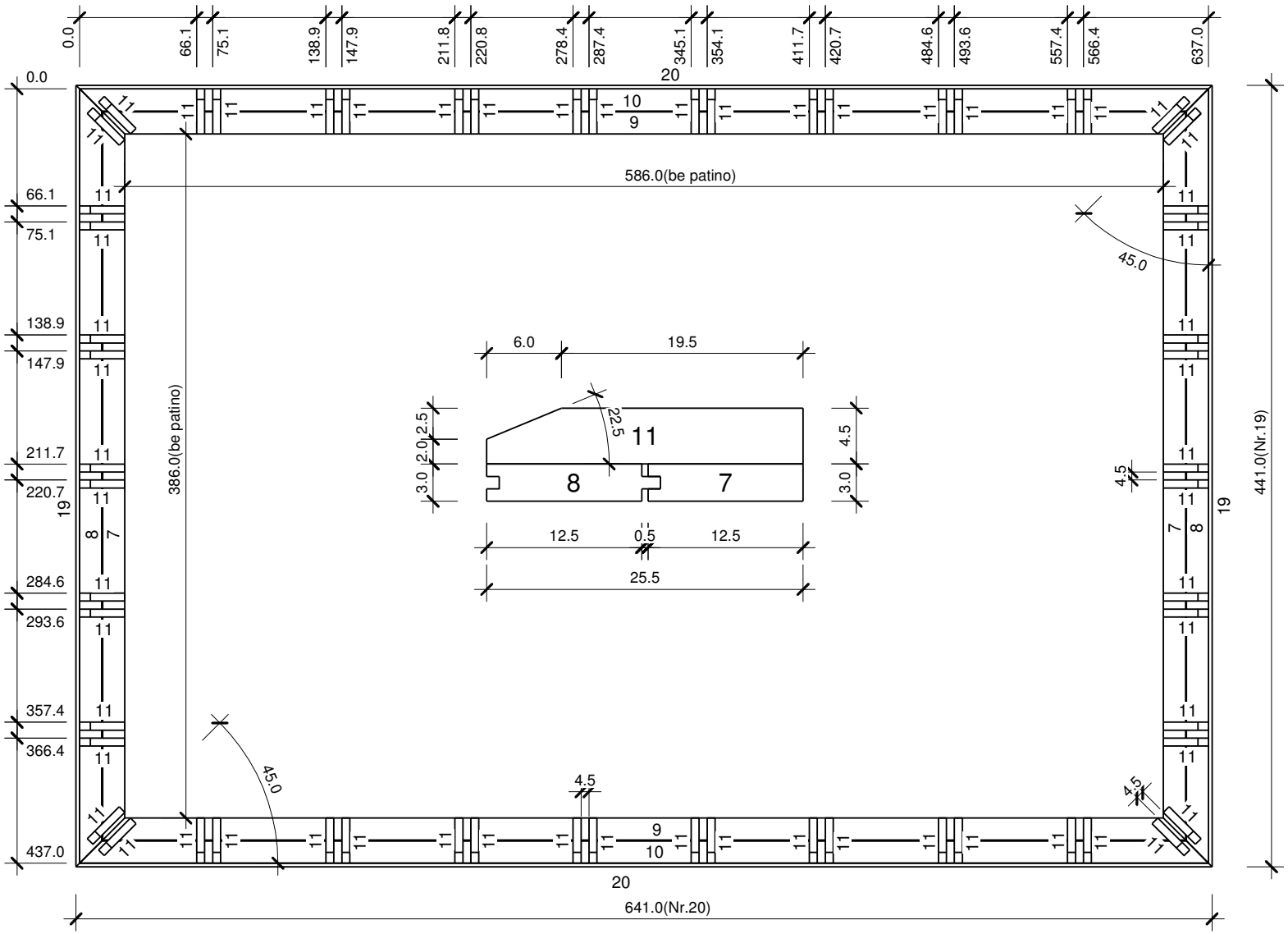
0.0
66.1
75.1
138.9
147.9
211.8
220.8
278.4
287.4
345.1
354.1
411.7
420.7
484.6
493.6
557.4
566.4
637.0
20
10
9
586.0(be patino)
45.0
6.0
19.5
22.5
11
8
7
2.5
2.0
3.0
4.5
12.5
0.5
25.5
386.0(be patino)
441.0(Nr.19)
19
284.6
293.6
357.4
366.4
437.0
641.0(Nr.20)

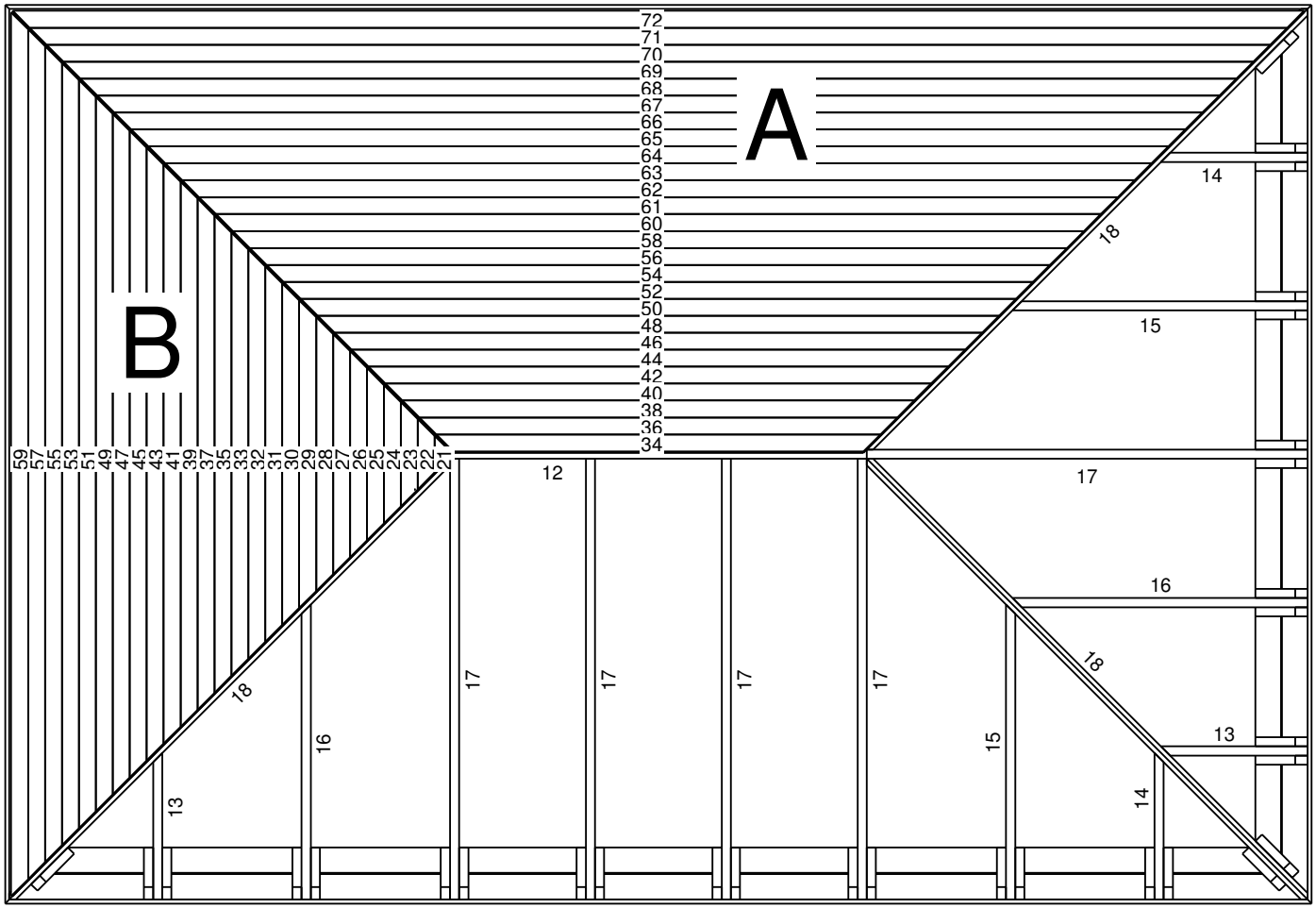
A
B
72
71
70
69
68
67
66
65
64
63
62
61
60
58
56
54
52
50
48
46
44
42
40
38
36
34
59
57
55
53
51
49
47
45
43
41
39
37
35
33
32
31
30
29
28
27
26
25
24
23
22
21
12
13
14
15
16
17
18

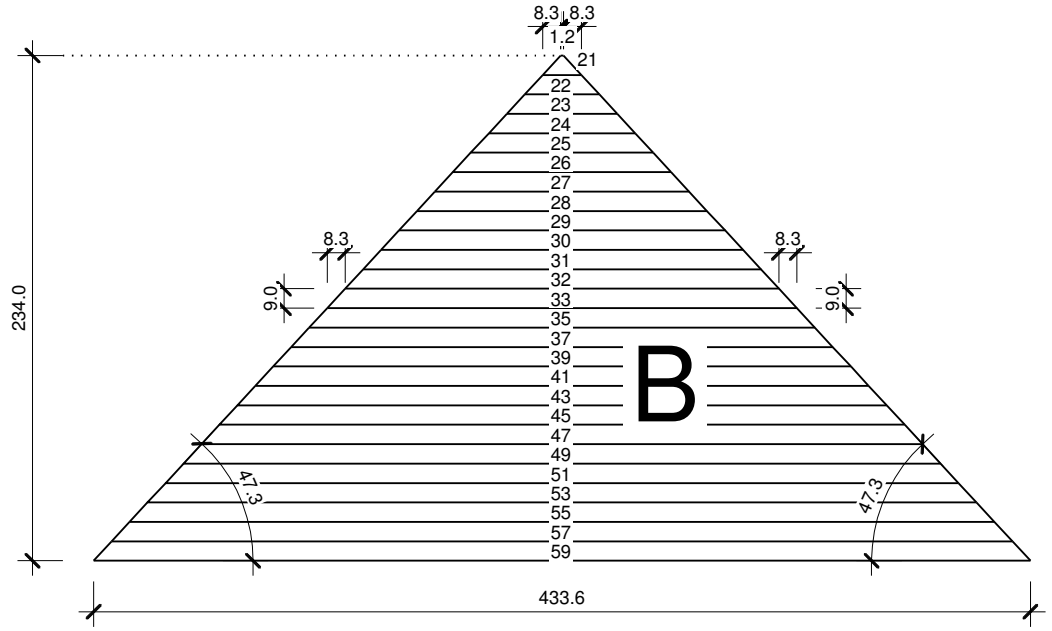
8.3
8.3
1.2
21
22
23
24
25
26
27
28
29
30
31
32
33
35
37
39
41
43
45
47
49
51
53
55
57
59
8.3
8.3
9.0
9.0
234.0
B
47.3
47.3
433.6

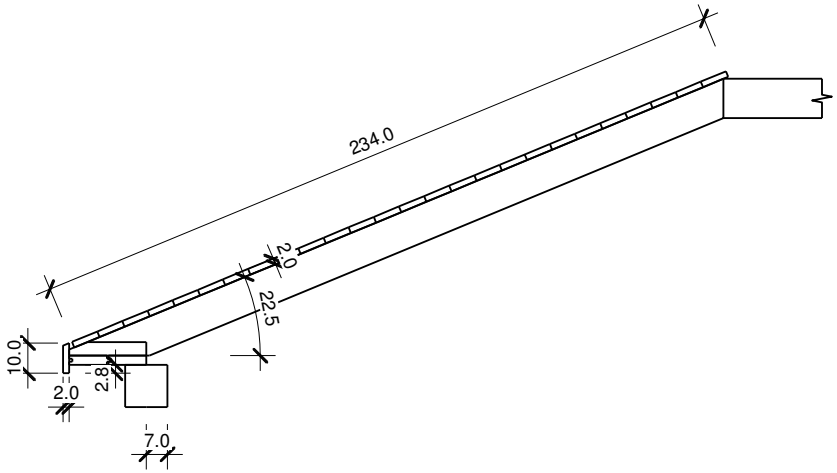
234.0
2.0
22.5
10.0
2.8
2.0
7.0

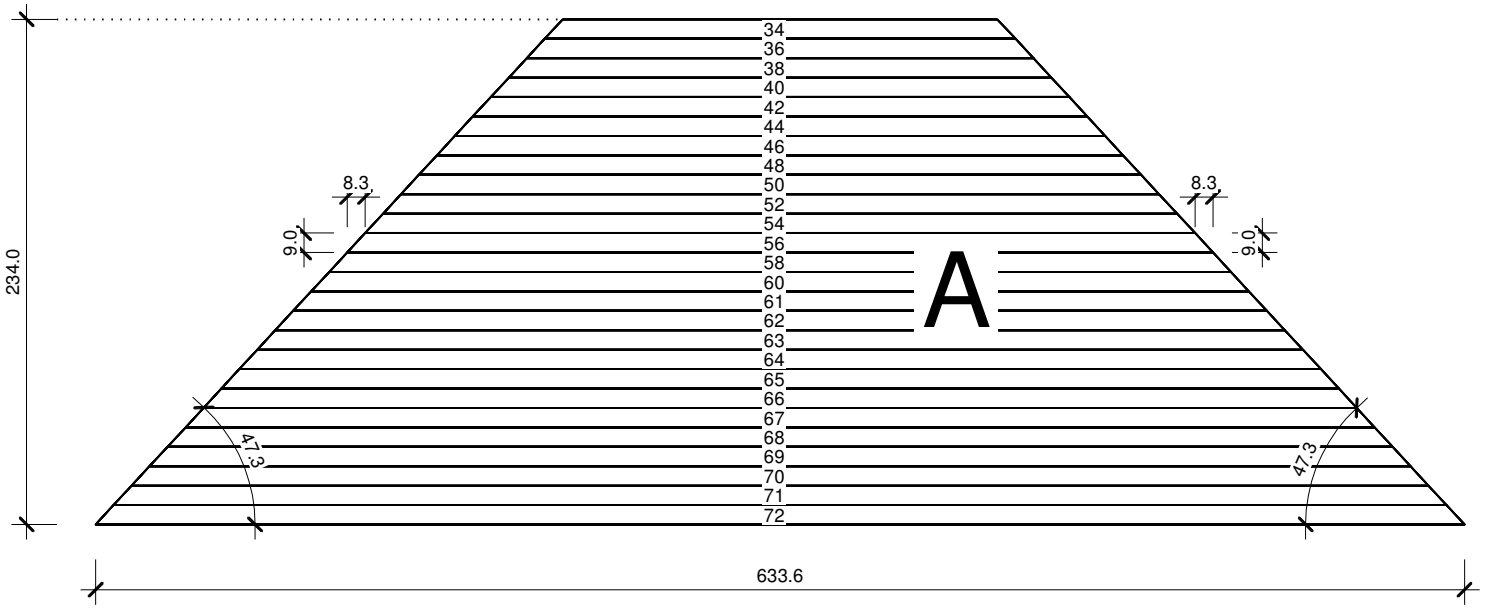
34
36
38
40
42
44
46
48
50
52
54
56
58
60
61
62
63
64
65
66
67
68
69
70
71
72
8.3
8.3
9.0
9.0
234.0
A
47.3
47.3
633.6